Work Order ID 72790

Friday, August 12, 2011 2:40:03 PM

Item ID: D2721-042 **Accept** **Setup Start** **Stop**

Revision ID:

Item Name: 206B Step Assembly

Start Date: 8/12/2011 **Start Qty:** 2.00 **Cust Item ID:**

Required Date: 8/19/2011 **Req'd Qty:** 2.00 **Customer:**

Reference:

Approvals: **Process Plan:** ✓ **Date:** 11-08-12 **Tooling:** **Date:** **Run Start** **Stop**

QC: **Date:** **SPC (Y/N):** **Date:**

Sequence ID/ Work Center ID	Operation Description	Set Up/ Run Hours	Tool ID	Tool #	Plan Code	Accept Qty	Reject Qty	Reject Number	Insp. Stamp
Draw Nbr	**Revision Nbr**								
D2721	Rev C								
100	Large Fab	0.00							
Large Fab	**Memo**	0.00							
Large Fab	Cut D2721-2 using D2622 extrusion as per Dwg D2721 Deburr and bevel ends for welding		11·10·17			2	ϕ		
110	Large Fab	0.00							
Large Fab	**Memo**	0.00							
Large Fab	Weld end cap (One End Only) and lugs as per Dwg D2721 using Jig DT followed by Jig DT A/R AL Rod ~~Batch:~~ H4514 118735 Grind end cap welds flush		11·10·18			2	ϕ		

Dart Aerospace Ltd

WORK ORDER CHANGES

W/O:							
DATE	STEP	PROCEDURE CHANGE	By	Date	Qty	Approval Chief Eng / Prod Mgr	Approval QC Inspector

Part No: _____ **PAR #:** _____ **Fault Category:** _____ **NCR:** Yes No **DQA:** _____ **Date:** _____

Resolution: _____ **Disposition:** _____ **QA: N/C Closed:** _____ **Date:** _____

WORK ORDER NON-CONFORMANCE (NCR)

NCR:								
			Corrective Action Section B					
DATE	STEP	Description of NC Section A	Initial Chief Eng	Action Description Chief Eng	Sign & Date	Verification Section C	Approval Chief Eng	Approval QC Inspector

NOTE: Date & initial all entries

Work Order ID 72790

Friday, August 12, 2011 2:40:03 PM

Item ID: D2721-042 **Accept** **Setup Start** **Stop**

Revision ID:

Item Name: 206B Step Assembly

Start Date: 8/12/2011 **Start Qty:** 2.00 **Cust Item ID:**

Required Date: 8/19/2011 **Req'd Qty:** 2.00 **Customer:**

Reference:

Run Start **Stop**

Approvals: **Process Plan:** _____ **Date:** _____ **Tooling:** _____ **Date:** _____

QC: _____ **Date:** _____ **SPC (Y/N):** _____ **Date:** _____

Sequence ID/ Work Center ID	Operation Description	Set Up/ Run Hours	Tool ID	Tool #	Plan Code	Accept Qty	Reject Qty	Reject Number	Insp. Stamp
120	QC9- Inspect visual per QSI004- Fusion Welds	0.00				2	Ø		11/10/18
QC	Memo	0.00							
Quality Control									
130	QC5- Inspect part completeness to step on W/O	0.00				~~x2~~ RH			
QC	Memo	0.00							
Quality Control									
140	Chemical Conversion Coat per QSI005 4.1	0.00				2XØ			11/10/19
HandFinish	Memo	0.00				RH			
Hand Finishing									

Dart Aerospace Ltd

W/O:		WORK ORDER CHANGES					
DATE	STEP	PROCEDURE CHANGE	By	Date	Qty	Approval Chief Eng / Prod Mgr	Approval QC Inspector

Part No: _____ PAR #: _____ Fault Category: _____ NCR: Yes No DQA: _____ Date: _____

Resolution: _____ Disposition: _____ QA: N/C Closed: _____ Date: _____

NCR:		WORK ORDER NON-CONFORMANCE (NCR)						
			Corrective Action Section B					
DATE	STEP	Description of NC Section A	Initial Chief Eng	Action Description Chief Eng	Sign & Date	Verification Section C	Approval Chief Eng	Approval QC Inspector

NOTE: Date & initial all entries

H:\fFORMS\Quality Assurance\approved QA\NCRWO RevE

Work Order ID 72790

Friday, August 12, 2011 2:40:03 PM

Item ID: D2721-042 **Accept** **Setup Start** **Stop**

Revision ID:

Item Name: 206B Step Assembly

Start Date: 8/12/2011 **Start Qty:** 2.00 **Cust Item ID:**

Required Date: 8/19/2011 **Req'd Qty:** 2.00 **Customer:**

Reference:

Run Start **Stop**

Approvals: **Process Plan:** _____ **Date:** _____ **Tooling:** _____ **Date:** _____

QC: _____ **Date:** _____ **SPC (Y/N):** _____ **Date:** _____

Sequence ID/ Work Center ID	Operation Description	Set Up/ Run Hours	Tool ID	Tool #	Plan Code	Accept Qty	Reject Qty	Reject Number	Insp. Stamp
150	QC3- Inspect Part Finish	0.00				2		11-10-20	
QC	**Memo**	0.00							
Quality Control									
160		0.00							
Large Fab	Large Fab					2	ϕ		
Large Fab	**Memo**	0.00							
	Inspect for foreign object per QSI 024								
	Weld Remaining end cap as per Dwg D2721								
	A/R AL Rod Batch: 114514								
	Grind End Cap Welds Flush								
170	~~QC9~~- Inspect visual per QSI004- Fusion Welds	0.00							
QC	QC10 **Memo**	0.00				+2 RM			
Quality Control									

11.10.20

Sulio/21

Pto →

Dart Aerospace Ltd

WORK ORDER CHANGES

W/O: 72790 Perm Chg.

DATE	STEP	PROCEDURE CHANGE	By	Date	Qty	Approval Chief Eng / Prod Mgr	Approval QC Inspector
11/10/21	# 170	change to QC ID inspection	[illegible]	11.10.21	✓	[illegible]	[illegible] 11/10/21

Part No: _____ PAR #: _____ Fault Category: _____ NCR: Yes No DQA: _____ Date: _____

Resolution: _____ Disposition: _____ QA: N/C Closed: _____ Date: _____

WORK ORDER NON-CONFORMANCE (NCR)

NCR:

DATE	STEP	Description of NC Section A	Corrective Action Section B: Initial Chief Eng	Action Description Chief Eng	Sign & Date	Verification Section C	Approval Chief Eng	Approval QC Inspector

NOTE: Date & initial all entries

H:\fFORMS\Quality Assurance\approved QA\NCRWO RevE

Work Order ID 72790

Friday, August 12, 2011 2:40:03 PM

Item ID: D2721-042 **Accept** **Setup Start**

Revision ID:

Item Name: 206B Step Assembly **Stop**

Start Date: 8/12/2011 **Start Qty:** 2.00 **Cust Item ID:**

Required Date: 8/19/2011 **Req'd Qty:** 2.00 **Customer:**

Reference:

Approvals: **Process Plan:** _____ **Date:** _____ **Tooling:** _____ **Date:** _____ **Run Start**

QC: _____ **Date:** _____ **SPC (Y/N):** _____ **Date:** _____ **Stop**

Sequence ID/ Work Center ID	Operation Description	Set Up/ Run Hours	Tool ID	Tool #	Plan Code	Accept Qty	Reject Qty	Reject Number	Insp. Stamp
180	QC5- Inspect part completeness to step on W/O	0.00							
QC	Memo	0.00				x2			
Quality Control						RH			
190	Chemical Conversion Coat per QSI005 4.1	0.00							
HandFinish	Memo	0.00							
Hand Finishing									
200	White Gloss(Ref:4.3.5.1) per QSI005 4.3-Alum	0.00							
Powdercoat	Memo	0.00							
Powder Coating	START TIME: 9:00 OVEN TEMPERATURE: 320 0F FINISH TIME: 9:30								

5 11/10/21

2x Ø M-f 11/10/21 RH

2x Ø M-f 11/10/24 RH

M117746

Dart Aerospace Ltd

WORK ORDER CHANGES

W/O:

DATE	STEP	PROCEDURE CHANGE	By	Date	Qty	Approval Chief Eng / Prod Mgr	Approval QC Inspector

Part No: _____ PAR #: _____ Fault Category: _____ NCR: Yes No DQA: _____ Date: _____

Resolution: _____ Disposition: _____ QA: N/C Closed: _____ Date: _____

WORK ORDER NON-CONFORMANCE (NCR)

NCR:

DATE	STEP	Description of NC Section A	Corrective Action Section B			Verification Section C	Approval Chief Eng	Approval QC Inspector
			Initial Chief Eng	Action Description Chief Eng	Sign & Date			

NOTE: Date & initial all entries

H:\fFORMS\Quality Assurance\approved QA\NCRWO RevE

Work Order ID 72790

Friday, August 12, 2011 2:40:03 PM

Item ID: D2721-042 **Accept** **Setup Start**

Revision ID:

Item Name: 206B Step Assembly **Stop**

Start Date: 8/12/2011 **Start Qty:** 2.00 **Cust Item ID:**

Required Date: 8/19/2011 **Req'd Qty:** 2.00 **Customer:**

Reference:

Approvals: **Process Plan:** _____ **Date:** _____ **Tooling:** _____ **Date:** _____ **Run Start**

QC: _____ **Date:** _____ **SPC (Y/N):** _____ **Date:** _____ **Stop**

Sequence ID/ Work Center ID	Operation Description	Set Up/ Run Hours	Tool ID	Tool #	Plan Code	Accept Qty	Reject Qty	Reject Number	Insp. Stamp
210	QC3- Inspect Part Finish	0.00							
QC	**Memo**	0.00				2	BK 11-10-24.		
Quality Control									
220	Wing Walk as per dwg QSI005 4.4 Batch 118988	0.00							
HandFinish	**Memo**	0.00				2	BK 11-10-24		
Hand Finishing									
230	QC3- Inspect Part Finish	0.00							
QC	**Memo**	0.00				2RH & JM 11/10/24			
Quality Control									

Dart Aerospace Ltd

W/O:		WORK ORDER CHANGES					
DATE	STEP	PROCEDURE CHANGE	By	Date	Qty	Approval Chief Eng / Prod Mgr	Approval QC Inspector

Part No: _____ PAR #: _____ Fault Category: _____ NCR: Yes No DQA: _____ Date: _____

Resolution: _____ Disposition: _____ QA: N/C Closed: _____ Date: _____

NCR:		WORK ORDER NON-CONFORMANCE (NCR)						
			Corrective Action Section B					
DATE	STEP	Description of NC Section A	Initial Chief Eng	Action Description Chief Eng	Sign & Date	Verification Section C	Approval Chief Eng	Approval QC Inspector

NOTE: Date & initial all entries

H:\fFORMS\Quality Assurance\approved QA\NCRWO RevE

Work Order ID 72790

Friday, August 12, 2011 2:40:03 PM

Item ID: D2721-042 **Accept** **Setup Start**

Revision ID:

Item Name: 206B Step Assembly **Stop**

Start Date: 8/12/2011 **Start Qty:** 2.00 **Cust Item ID:**

Required Date: 8/19/2011 **Req'd Qty:** 2.00 **Customer:**

Reference:

Approvals: **Process Plan:** _____ **Date:** _____ **Tooling:** _____ **Date:** _____ **Run Start**

QC: _____ **Date:** _____ **SPC (Y/N):** _____ **Date:** _____ **Stop**

Sequence ID/ Work Center ID	Operation Description	Set Up/ Run Hours	Tool ID	Tool #	Plan Code	Accept Qty	Reject Qty	Reject Number	Insp. Stamp
240	Identify as per dwg & Stock Location:_____	0.00							
Packaging			PP 72789			11/10/25			
	Memo	0.00							
Packaging									
250	QC21- Final Inspection - Work Order Release	0.00							
QC							11/10/26		
	Memo	0.00							
Quality Control									

11-10-26

Dart Aerospace Ltd

W/O:		WORK ORDER CHANGES					
DATE	STEP	PROCEDURE CHANGE	By	Date	Qty	Approval Chief Eng / Prod Mgr	Approval QC Inspector

Part No: _____ PAR #: _____ Fault Category: _____ NCR: Yes No DQA: _____ Date: _____

Resolution: _____ Disposition: _____ QA: N/C Closed: _____ Date: _____

NCR:		WORK ORDER NON-CONFORMANCE (NCR)						
			Corrective Action Section B					
DATE	STEP	Description of NC Section A	Initial Chief Eng	Action Description Chief Eng	Sign & Date	Verification Section C	Approval Chief Eng	Approval QC Inspector

NOTE: Date & initial all entries

H:\fFORMS\Quality Assurance\approved QA\NCRWO RevE

Picklist Print

Friday, August 12, 2011 2:40:07 PM

2

Work Order ID: 72790

Parent Item: D2721-042

Parent Item Name: 206B Step Assembly

Start Date: 8/12/2011 **Required Date:** 8/19/2011

Start Qty: 2.00 **Required Qty:** 2.00

Comments: IPP Rev:F As Per Ecn 766 06-01-06 JLM IPP Rev:G add wing walk DD 10.02.24 verified by:EC

Component Item ID/ Item Name	Replacement Item ID	Mfg/ Purch	Bin Item	Primary Location	Last Location	Route Seq ID	Unit of Measure	Qty on Hand	Qty per Kit	Total Qty	Qty Issued	Date Issued	Status
D2622-120C Step Extrusion		Manufactured	No			100	Each	83.7000	1	2	11·10·18		
				Location		**Loc Qty**		**Loc Code**					
				HALL B72131		74				2			
				64409		6							
				68293		68							
				WA		9.7							
				46910		2							
				66970		7.7							
D2734 Step End Plate		Manufactured	No			110	Each	47.0000	1	2	11·10·18		
				Location		**Loc Qty**		**Loc Code**					
				WA B73196		47				2			
				70701		47							
D3461-1 Mounting Plate		Manufactured	No			110	Each	52.0000	1	2	11·10·18		
				Location		**Loc Qty**		**Loc Code**					
				WA017		52							
				41600		6				2			
				58756		46							

Dart Aerospace Ltd

W/O:		WORK ORDER CHANGES					
DATE	STEP	PROCEDURE CHANGE	By	Date	Qty	Approval Chief Eng / Prod Mgr	Approval QC Inspector

Part No: _____ PAR #: _____ Fault Category: _____ NCR: Yes No DQA: _____ Date: _____

Resolution: _____ Disposition: _____ QA: N/C Closed: _____ Date: _____

NCR:		WORK ORDER NON-CONFORMANCE (NCR)						
			Corrective Action Section B					
DATE	STEP	Description of NC Section A	Initial Chief Eng	Action Description Chief Eng	Sign & Date	Verification Section C	Approval Chief Eng	Approval QC Inspector

NOTE: Date & initial all entries

H:\fFORMS\Quality Assurance\approved QA\NCRWO RevE

Picklist Print

Friday, August 12, 2011 2:40:07 PM

Work Order ID: 72790

Parent Item: D2721-042

Parent Item Name: 206B Step Assembly

Start Date: 8/12/2011 **Required Date:** 8/19/2011

Start Qty: 2.00 **Required Qty:** 2.00

D3461-3	Manufactured	No	110	Each	9.0000	1	2	11·10·18
Mounting Plate								

Location	Loc Qty	Loc Code	
WA017	9		
41601	9		2

D3461-5	Manufactured	No	110	Each	25.0000	1	2	11·10·18
Mounting Plate								

Location	Loc Qty	Loc Code	
WA017	25		
33862	25		2

D3461-7	Manufactured	No	110	Each	27.0000	1	2	11·10·18
Mounting Plate								

Location	Loc Qty	Loc Code	
WA017	27		
33863	27		2

D2734	Manufactured	No	160	Each	47.0000	1	2	11·10·20
Step End Plate								

Location	Loc Qty	Loc Code	
WA B73196	47		2
70701	47		

Dart Aerospace Ltd

W/O:		WORK ORDER CHANGES					
DATE	STEP	PROCEDURE CHANGE	By	Date	Qty	Approval Chief Eng / Prod Mgr	Approval QC Inspector

Part No: _____ **PAR #:** _____ **Fault Category:** _____ **NCR:** Yes No **DQA:** _____ **Date:** _____

Resolution: _____ **Disposition:** _____ **QA: N/C Closed:** _____ **Date:** _____

NCR:		WORK ORDER NON-CONFORMANCE (NCR)						
			Corrective Action Section B					
DATE	STEP	Description of NC Section A	Initial Chief Eng	Action Description Chief Eng	Sign & Date	Verification Section C	Approval Chief Eng	Approval QC Inspector

NOTE: Date & initial all entries

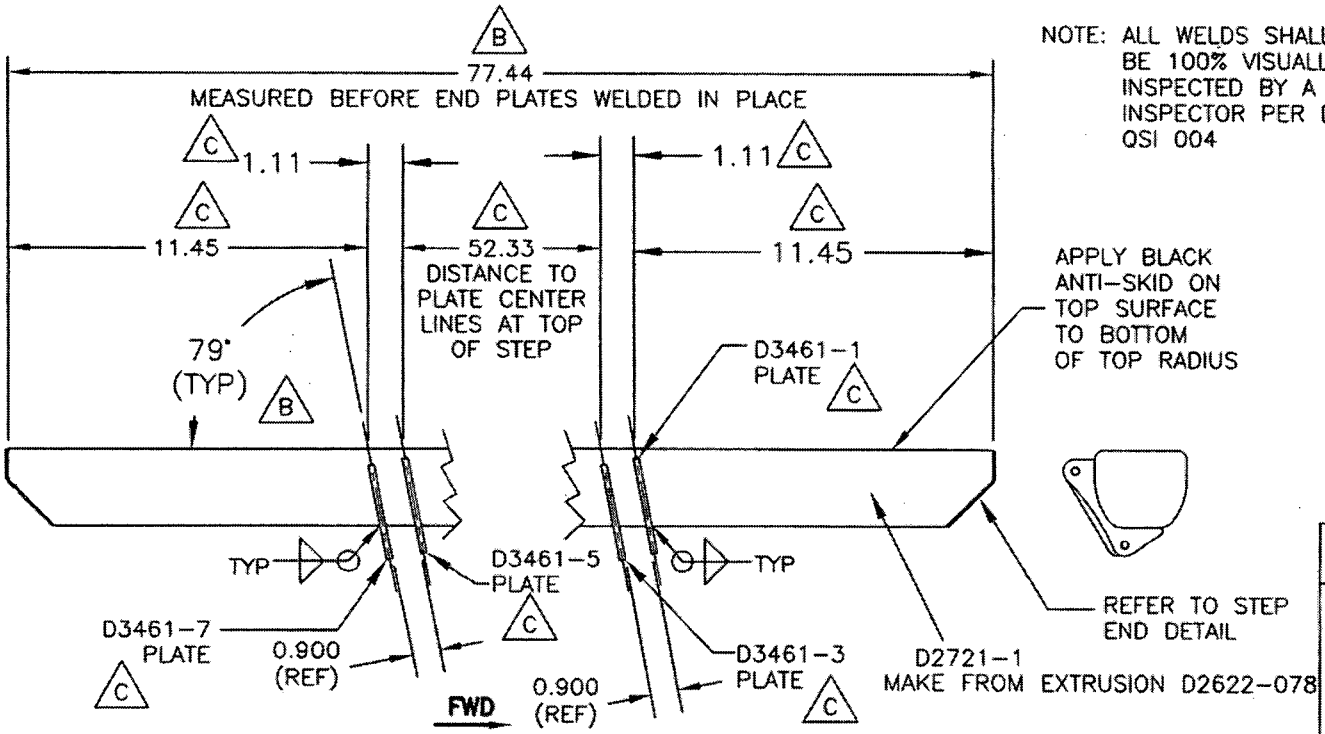

NOTE: ALL WELDS SHALL BE 100% VISUALLY INSPECTED BY A QUALIFIED INSPECTOR PER DART QSI 004

RELEASED 05.11.14

D2721-041 LH STEP ASSEMBLY (SHOWN)
D2721-042 RH STEP ASSEMBLY (OPPOSITE)

ROUND CORNER OF EXTRUSION TO MATCH BEND RADIUS OF END PLATE

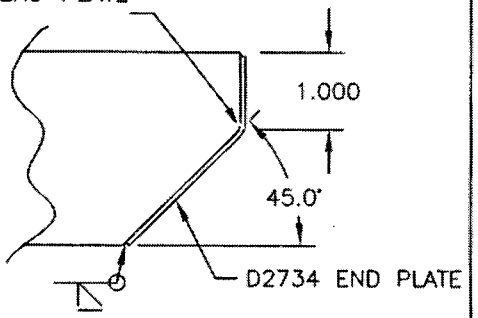

TYPICAL STEP END DETAIL B

D2721-041/-042 STEP ASSEMBLY PARTS LIST

QTY -041	QTY -042	PART NUMBER	DESCRIPTION
X		D2721-041	LH STEP ASSEMBLY
	X	D2721-042	RH STEP ASSEMBLY
1	1	D2622-078	EXTRUSION
2	2	D2734	END PLATE
1	1	D3461-1	PLATE
1	1	D3461-3	PLATE
1	1	D3461-5	PLATE
1	1	D3461-7	PLATE

SHOP COPY
RETURN TO
ENGINEERING
UNCONTROLLED COPY
SUBJECT TO AMENDMENT
WITHOUT NOTICE
WORK ORDER
NO. 72790
11-08-12

D2721-041/-042 STEP ASSEMBLY

1) MAKE FROM EXTRUSION D2622
2) WELD PER DART QSI 004
3) FINISH: CHEMICAL CONVERSION COAT PER DART QSI 005 4.1
   POWDER COAT ASSEMBLY WHITE (4.3.5.1) PER DART QSI 005 4.3
   APPLY BLACK ANTI-SKID PAINT PER DART QSI 005 4.4
4) ALL DIMENSIONS ARE IN INCHES
5) ALL TOLERANCES ARE PER DART QSI 018 UNLESS OTHERWISE NOTED

A	97.12.04	NEW ISSUE
B	98.10.19	79° WAS 80°, UPDATED WELD DETAIL REVISED TOLERANCES, 53.44 WAS 54.0
C	05.09.19	RE-DESIGN, ADD D3461-1/-3/-5/-7

DART

DESIGN: PH | DRAWN BY: PH | CHECKED | APPROVED | DATE: 05.09.19

DART AEROSPACE USA, INC.
PORT HADLOCK, WA

DRAWING NO. D2721 | REV. C | SHEET 1 OF 1

TITLE: 206B STEP ASSEMBLY | SCALE: NTS

Copyright © 2005 by DART AEROSPACE USA, INC.
THIS DOCUMENT IS PRIVATE AND CONFIDENTIAL AND IS SUPPLIED ON THE EXPRESS CONDITION THAT IT IS NOT TO BE USED FOR ANY PURPOSE OR COPIED OR COMMUNICATED TO ANY OTHER PERSON WITHOUT WRITTEN PERMISSION FROM DART AEROSPACE USA, INC.